TOPAZ™ FLOAT VALVE

200 L / MIN

© Jobe Valves P.O Box 17 Matamata New Zealand **P:** +64 (0)7 880 9090 **F:** +64 (0)7 880 9099 **E:** info@jobevalves.com **W:** www.jobevalves.com

TOPAZ FLOAT VALVE

PRODUCT INFO

TOPAZ™ FLOAT VALVE

Description

Topaz trough valves are float operated valves for use in automatic filling of water troughs, tanks, cisterns etc. The valve is configured for **above or below water mounting**. The float operates a small pilot valve which in turn operates the main diaphragm valve. Topaz trough valves are a good choice where their **high flow**, compact, robust, non corrosive construction and high level of adaptability are needed.

Applications

Maintaining Water Levels in:

- Animal Drinking Troughs
- Water Storage Tanks
- Water Cisterns
- Air Conditioning Systems
- High Pressure Cleaning Systems
- Irrigation Applications

Flow Graph

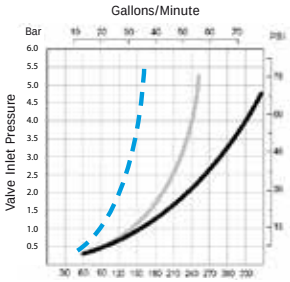

Key Flow Litres/Minute

- 15mm (½")
- 20mm (¾")
- 25mm & 32mm (1" & 1 ¼")

Features

- High flow
- Compact robust construction
- Mounts horizontally or vertically
- Made from corrosion resistant materials
- Shuts down slowly to minimise water hammer
- 20 - 60mm (¾" - 2 ½") water level differential (increases as water inlet pressure increases)
- Pressure rating 0.3 - 7 Bar (5 - 100 PSI)
- Float position easily adjustable with no tools
- Valve has switch to lock it in off position
- Has port to connect Frostpro anti freeze device

Mounting Positions

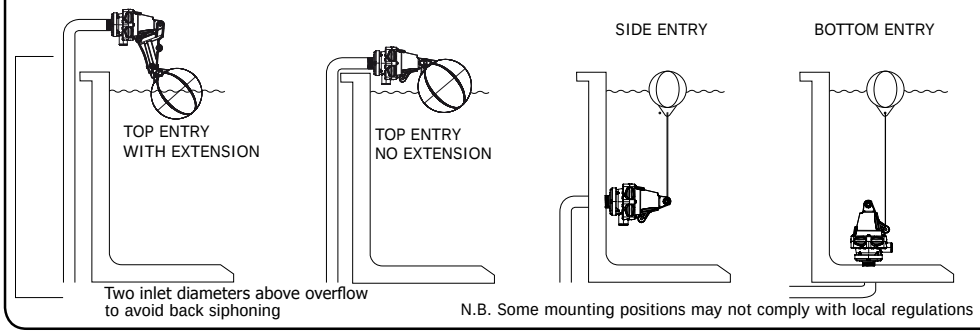

N.B. Some mounting positions may not comply with local regulations

Options

	BSP				NPT			
Inlet Size	½"	¾"	1"	1 ¼"	½"	¾"	1"	1 ¼"
Short Tail		✓	✓	✓		✓	✓	✓
Long Tail	✓	✓	✓	✓	✓	✓	✓	✓

Long Tail: Supplied with backnut and seal washer.

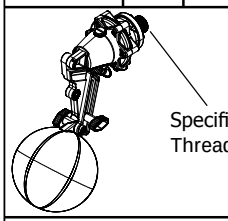

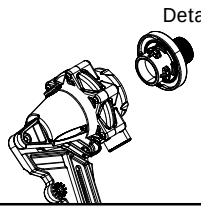

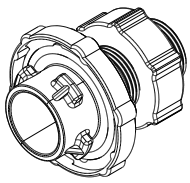

Floats: 125mm wide floats supplied standard.
Note: Suitable for any mounting position

70mm and 95mm floats optional
Note: Suitable for top entry only.

Standard	Optional	Optional
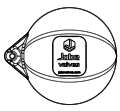	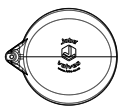	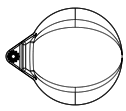
125mm	70mm	95mm

TOPAZ TROUGH VALVE SPECIFICATION

PRODUCT	CODE	INLET SIZE	CODE	OPTIONS	CODE
Topaz Trough Valve	TPV	½" bsp/npt	15	Detach Base	D
		¾" bsp/npt	20	Long Tail Thread	LT
		1" bsp	25		
		1" npt	1	70mm wide Float	F70
		1 ¼" bsp	32	95mm wide Float	F95
		1 ¼" npt	114		

(e.g) A Topaz Trough Valve with: ¾" bsp inlet thread, detach base, long tail thread has the following spec number: TPV 20 D LT

NOTE: If no options are specified the standard ones will be supplied

Note: Product may differ slightly from these specs due to ongoing product development.

200 L / MIN

TOPAZ FLOAT VALVE
DIMENSIONS & MATERIALS

TOPAZ™ FLOAT VALVE

200 L / MIN

Topaz Dimensions

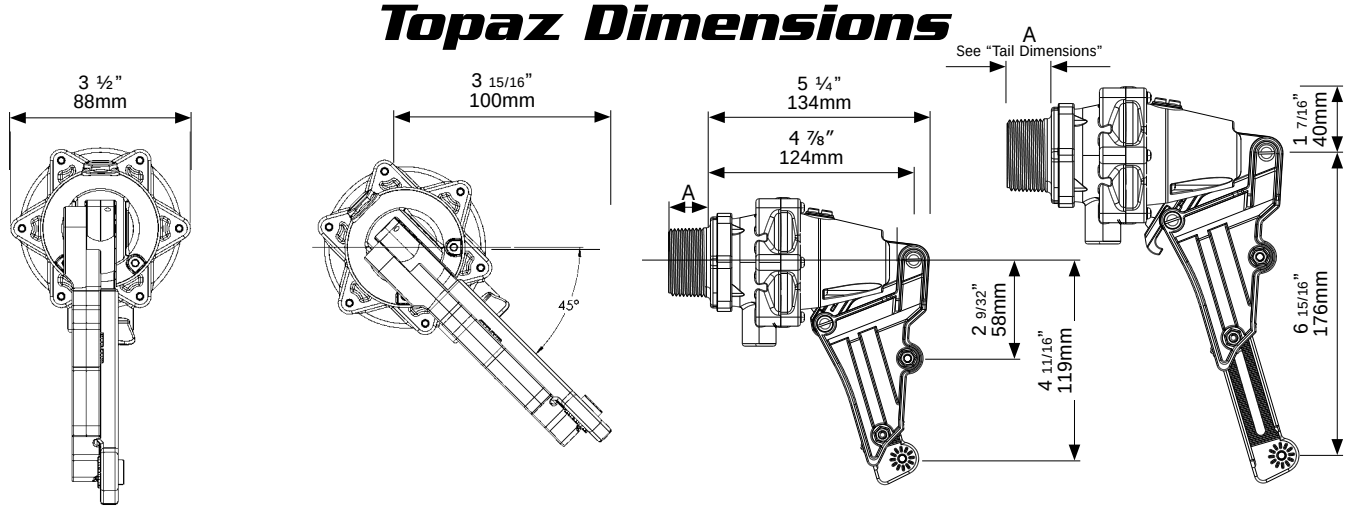

Float Dimensions

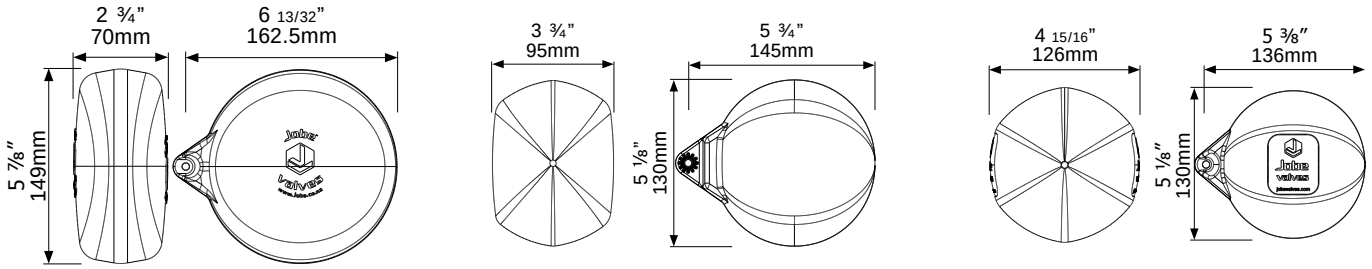

70mm Float | 95mm Float | 125mm Float (Standard)

Part	Material	Part	Material
Valve Body & Tail	Glass Filled Nylon	**Float Cord**	Polyester
White & Yellow Internal Parts	Acetal	**Springs, Bolts, Nuts, Pin, Screws**	304 Stainless Steel
Filter	PP/Nylon	**O'Rings**	Nitrile
Diaphragm	EPDM	**Float**	HDPE
Seal	TPU	**Actuator / Arms & Caps**	ABS

Tail Dimensions

Dimension A	mm	inches
20mm (3/4") Short tail	22	⅞
25mm (1") bsp/npt short tail	22	⅞
32mm (1 1/4") bsp/npt short tail	25	1
15mm (1/2") long tail	100	4
20mm (3/4") long tail	38	1 ½
25mm (1") bsp/npt long tail	54	2 ⅛
32mm (1 1/4") bsp/npt long tail	60	2 ⅜

Maximum Operating Temperature

60ºC, 140ºF

© Jobe Valves P.O Box 17 Matamata New Zealand **P:** +64 (0)7 880 9090 **F:** +64 (0)7 880 9099 **E:** info@jobevalves.com **W:** www.jobevalves.com

TOPAZ FLOAT VALVE
PARTS IDENTIFICATION SHEET

Jobe valves

TOPAZ™ FLOAT VALVE

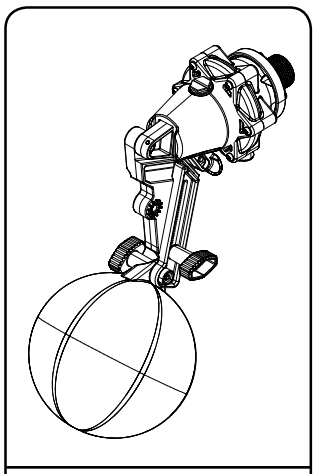

CODE: TPV

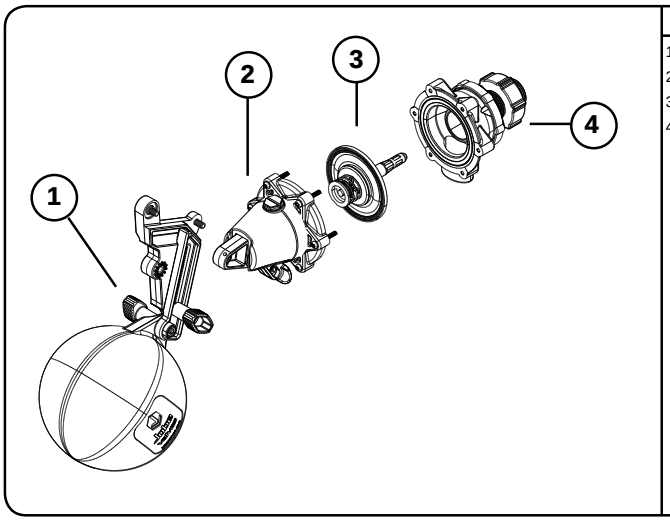

	CODE	DESCRIPTION
1		Float Assembly
2	TPP2	Cap & Actuator Assembly
3	TPP3	Diaphragm Assembly
4		Detach Base Assembly

1

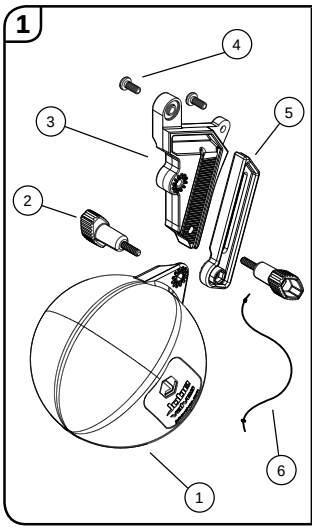

	CODE	DESCRIPTION
1	TPP10110	70mm Float
	TPP10115	95mm Float
	TPP10120	125mm Float
2	TPP1020	Wing Bolt
3	TPP1030	Extension Arm
4	TPP1040	Bolt M5 x 12 Pan Slot
5	TPP1050	Extension Slide
6	TPP1060	Float Cord

2

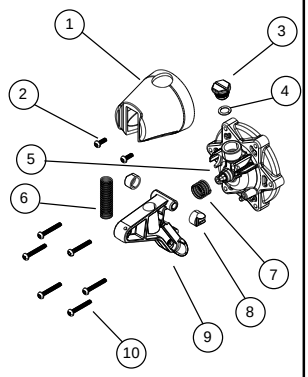

	CODE	DESCRIPTION
1	TPP2010	Actuator Cap
2	TPP2020	6g x 10 S/S Screw
3	TPP2030	Frost Pro Plug
4	TPP2040	Frost Pro O'ring
5	TPP2050	Valve Cap Assembly
6	TPP2060	Actuator Spring
7	TPP2070	Damping Spring
8	TPP2080	Bearings (set of two)
9	TPP2090	Actuator Arm
10	TPP2100	6g x 25 S/S Screw

3

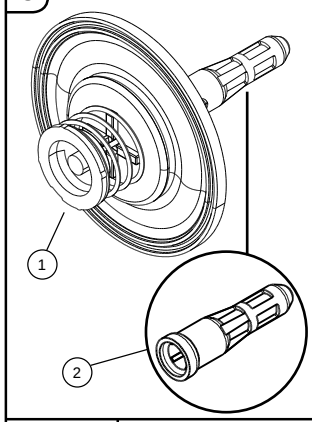

	CODE	DESCRIPTION
1	TPP3	Diaphragm Assembly
2	TPP3010	Pilot Flow Filter (Fine)
	TPP3011	Pilot Flow Filter (Coarse)

4

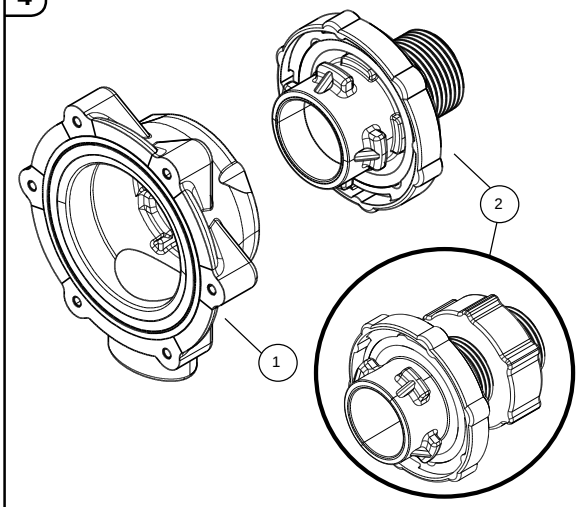

NB: All Long Tail Assemblies are supplied with a Seal Washer and Backnut included

	CODE	DESCRIPTION
1	DTP1	Detach Base
2		***BSP Tails***
		Short Tail Assembly (BSP)
	DTP020	Detach Tail 20mm(3/4") Short
	DTP025	Detach Tail 25mm(1") Short
	DTP032	Detach Tail 32mm(1 1/4") Short
		Long Tail Assembly (BSP)
	DTP015L	Detach Tail 15mm (1/2") Long
	DTP020L	Detach Tail 20mm (3/4") Long
	DTP025L	Detach Tail 25mm (1" bsp) Long
	DTP032L	Detach Tail 32mm (1 1/4" bsp) Long
		NPT Tails
		Short Tail Assembly (NPT)
	DTP0075	Detach Tail 3/4" npt
	DTP0100	Detach Tail 1" npt
	DTP0125	Detach Tail 1 1/4" npt
		Long Tail Assembly (NPT)
	DTP0050L	Detach Tail 1/2" npt Long
	DTP0075L	Detach Tail 3/4" npt Long
	DTP0100L	Detach Tail 1" npt Long
	DTP0125L	Detach Tail 1 1/4" npt Long

200 L / MIN